unilli TYRE

unilli

UNILLI MOTOR CO., LTD. ACME RUBBER IND. CO., LTD.

Factory1: 45, Singong 6th Rd., Tianjhong Township, Changhua County 52046,Taiwan
TEL : +886-4-8760061 FAX : +886-4-8760097
Factory2: 1-6, Douyuan E. Rd., Pitou Township, Changhua County 52345, Taiwan
TEL : +886-4-8877052 FAX : +886-4-8877349
E-mail: unilli-tyres@unilli.com
www.unilli.com

unilli

STRUCTURE OF TIRE

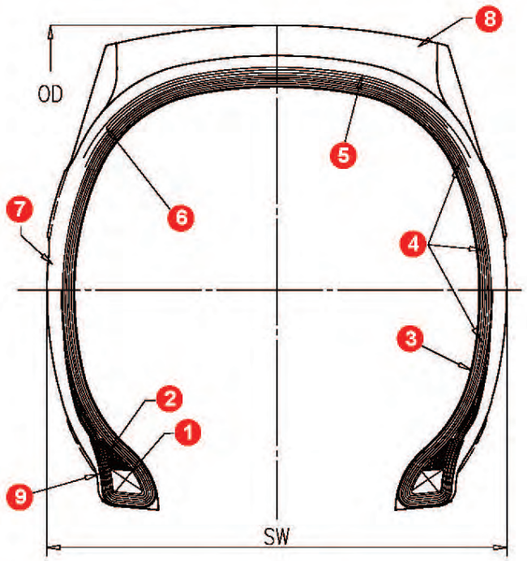

1. BEAD WIRE 鋼絲圈
2. BEAD FILLER 三角膠
3. INNER LINER 內面膠
4. PLY簾布層
5. BREAKER 緩衝層
6. SIDE WALL 胎邊膠
7. TREAD 胎面膠
8. CHAFER 防擦布

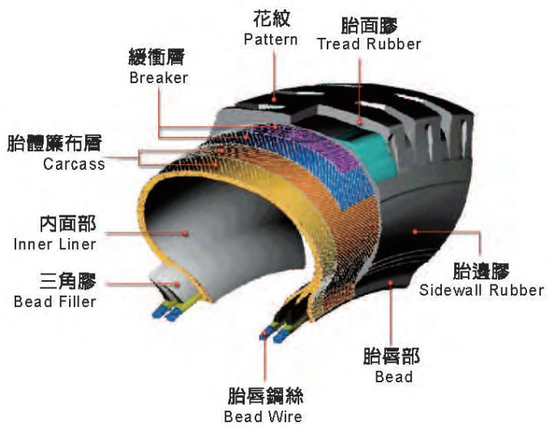

COMPANY INTRODUCTION

Acme Rubber Ind. Co., Ltd. a subsidiary of Unilli Motor Co.,Ltd, is a specialized manufacturer of tyres. We produce various kinds and sizes of pneumatic rubber tyres and sell them to all over the world.

Tyre is a capital intensive and technical intensive industry.
Acme Rubber Ind. Co., Ltd has advanced equipments, perfect developments and quality examination and high efficient management. We insist that quality is the most Important thing, and supply customers with the best products. We keep designing new products to meet market demands due to rapidly market change.

Though we are not the most famous tyre manufacturer, we have team of professional technicians & marketing staff and we supply you any product you require. Acme Rubber Ind. Co., Ltd is your best choice.

FOR

SCOOTER

STREET

TH-558N

SPORT COMPOUND

SIZE	S.W.(mm)	O.D.(mm)	MAX. LOAD(KG)	MAX. PRESSURE(PSI)	RIM(inch)
3.50-10	92	437	195	36	2.5
90/90-10	90	416	190	36	2.15
100/90-10	101	434	224	36	2.5
110/70-12	110	459	175	32	3.0
120/70-12	122	473	195	32	3.5
120/80-12	119	497	290	36	2.75
130/70-12	129	487	224	32	3.5

TH-558A

RACING COMPOUND

SIZE	S.W.(mm)	O.D.(mm)	MAX. LOAD(KG)	MAX. PRESSURE(PSI)	RIM(inch)
3.50-10	92	437	195	36	2.5
90/90-10	90	416	190	36	2.15
100/90-10	101	434	224	36	2.5
120/70-12	122	473	195	32	3.5
100/90-12	101	485	243	36	2.5
110/70-12	110	459	175	32	3.0
130/70-12	129	487	224	32	3.5
120/80-12	119	497	290	36	2.75

UN-599

SIZE	S.W.(mm)	O.D.(mm)	MAX. LOAD(KG)	MAX. PRESSURE(PSI)	RIM(inch)
3.50-10	92	437	195	36	2.5
90/90-10	90	416	190	36	2.15
100/90-10	101	434	224	36	2.5

WATT-W1

SIZE	S.W.(mm)	O.D.(mm)	MAX. LOAD(KG)	MAX. PRESSURE(PSI)	RIM(inch)
3.50-10	92	437	195	36	2.5
90/90-10	90	416	190	36	2.15
100/90-10	101	434	224	36	2.5
100/90-12	101	485	243	36	2.5
120/80-12	119	497	290	36	2.75

www.unilli.com

WATT-W2

SIZE	S.W.(mm)	O.D.(mm)	MAX. LOAD(KG)	MAX. PRESSURE(PSI)	RIM(inch)
110/70-12	110	459	175	32	3.0
120/70-12	122	473	195	32	3.5
130/70-12	129	487	224	32	3.5

TH-557A

SIZE	S.W.(mm)	O.D.(mm)	MAX. LOAD(KG)	MAX. PRESSURE(PSI)	RIM(inch)
90/90-12	90	467	212	36	2.15

TH-557N

SIZE	S.W.(mm)	O.D.(mm)	MAX. LOAD(KG)	MAX. PRESSURE(PSI)	RIM(inch)
3.50-10	92	437	195	36	2.5
90/90-10	90	416	190	36	2.15
100/80-10	101	414	206	36	2.5
100/90-10	101	434	224	36	2.5
110/70-12	110	459	175	32	3.0
120/70-12	122	473	195	32	3.5
120/80-12	119	497	290	36	2.75
130/70-12	129	487	224	32	3.5

FOR SCOOTER STREET

UN-588

SIZE	S.W.(mm)	O.D.(mm)	MAX. LOAD(KG)	MAX. PRESSURE(PSI)	RIM(inch)
100/90-14	101	536	230	32	2.5

UN-501

SIZE	S.W.(mm)	O.D.(mm)	MAX. LOAD(KG)	MAX. PRESSURE(PSI)	RIM(inch)
120/70-12	122	473	195	32	3.5
130/70-12	129	487	224	32	3.5

UN-501F

SIZE	S.W.(mm)	O.D.(mm)	MAX. LOAD(KG)	MAX. PRESSURE(PSI)	RIM(inch)
110/70-12	110	459	175	32	3.0

UN-501A

SIZE	S.W.(mm)	O.D.(mm)	MAX. LOAD(KG)	MAX. PRESSURE(PSI)	RIM(inch)
110/80-10	109	430	236	36	2.5

UN-502

SIZE	S.W.(mm)	O.D.(mm)	MAX. LOAD(KG)	MAX. PRESSURE(PSI)	RIM(inch)
3.00-10	80	413	150	36	2.15
3.50-10	92	437	195	36	2.5
80/90-10	80	398	160	36	1.85
90/90-10	90	416	190	36	2.15
100/90-10	101	434	224	36	2.5

UN-502A

SIZE	S.W.(mm)	O.D.(mm)	MAX. LOAD(KG)	MAX. PRESSURE(PSI)	RIM(inch)
90/90-10	90	416	190	36	2.15
100/80-10	101	414	206	36	2.5
80/100-10	80	414	170	36	1.85

UN-502N

SIZE	S.W.(mm)	O.D.(mm)	MAX. LOAD(KG)	MAX. PRESSURE(PSI)	RIM(inch)
3.00-10	80	413	150	36	2.15

www.unilli.com

FOR

SCOOTER

STREET

SIZE	S.W.(mm)	O.D.(mm)	MAX. LOAD(KG)	MAX. PRESSURE(PSI)	RIM(inch)
3.50-10	92	437	195	36	2.5
90/90-10	90	416	190	36	2.15
100/90-10	101	434	224	36	2.5

SIZE	S.W.(mm)	O.D.(mm)	MAX. LOAD(KG)	MAX. PRESSURE(PSI)	RIM(inch)
3.50-10	92	437	195	36	2.5
80/80-10	80	382	145	36	1.85
80/90-10	80	398	160	36	1.85
90/90-10	90	416	190	36	2.15
100/90-10	101	434	224	36	2.5
140/70-12	139	501	250	32	3.75
110/90-13	109	528	218	32	2.5
120/70-13	122	498	206	32	3.5
130/70-13	129	512	230	32	3.5

SIZE	S.W.(mm)	O.D.(mm)	MAX. LOAD(KG)	MAX. PRESSURE(PSI)	RIM(inch)
100/90-10	109	452	257	36	2.5
120/80-10	119	446	265	36	2.75
130/60-13	129	486	206	32	3.5

www.unilli.com

Gyro Canopy

SIZE	S.W.(mm)	O.D.(mm)	MAX. LOAD(KG)	MAX. PRESSURE(PSI)	RIM(inch)
130/90-6	139	402	206	32	3.0
130/90-8	139	453	300	36	3.0

SIZE	S.W.(mm)	O.D.(mm)	MAX. LOAD(KG)	MAX. PRESSURE(PSI)	RIM(inch)
100/80-10	101	414	206	36	2.5
120/70-10	122	422	180	32	3.5

SIZE	S.W.(mm)	O.D.(mm)	MAX. LOAD(KG)	MAX. PRESSURE(PSI)	RIM(inch)
90/90-10	90	416	190	36	2.15

SIZE	S.W.(mm)	O.D.(mm)	MAX. LOAD(KG)	MAX. PRESSURE(PSI)	RIM(inch)
3.50-10	92	437	195	36	2.5
90/90-10	90	416	190	36	2.15
100/90-10	101	434	224	36	2.5
110/70-12	110	459	175	32	3.0
120/70-12	122	473	195	32	3.5
130/70-12	129	487	224	32	3.5

FOR

SCOOTER

STREET

DT-167

SIZE	S.W.(mm)	O.D.(mm)	MAX. LOAD(KG)	MAX. PRESSURE(PSI)	RIM(inch)
3.00-10	80	413	150	36	2.15

DT-168

SIZE	S.W.(mm)	O.D.(mm)	MAX. LOAD(KG)	MAX. PRESSURE(PSI)	RIM(inch)
3.50-10	92	437	195	36	2.5
90/90-10	90	416	190	36	2.15
100/90-10	101	434	224	36	2.5

UN-9816N

SIZE	S.W.(mm)	O.D.(mm)	MAX. LOAD(KG)	MAX. PRESSURE(PSI)	RIM(inch)
3.00-10	80	413	150	36	2.15
3.50-10	92	437	195	36	2.5
90/90-10	90	416	190	36	2.15
100/90-10	101	434	224	36	2.5

O-300

SIZE	S.W.(mm)	O.D.(mm)	MAX. LOAD(KG)	MAX. PRESSURE(PSI)	RIM(inch)
3.50-10	92	437	195	36	2.5
90/90-10	90	416	190	36	2.15
100/90-10	101	434	224	36	2.5

P-500

SIZE	S.W.(mm)	O.D.(mm)	MAX. LOAD(KG)	MAX. PRESSURE(PSI)	RIM(inch)
3.50-10	92	437	195	36	2.5
90/90-10	90	416	190	36	2.15
100/90-10	101	434	224	36	2.5

P-600

SIZE	S.W.(mm)	O.D.(mm)	MAX. LOAD(KG)	MAX. PRESSURE(PSI)	RIM(inch)
3.50-10	92	437	195	36	2.5
90/90-10	90	416	190	36	2.15
100/90-10	101	434	224	36	2.5

Y-100

SIZE	S.W.(mm)	O.D.(mm)	MAX. LOAD(KG)	MAX. PRESSURE(PSI)	RIM(inch)
3.00-10	80	413	150	36	2.15
3.50-10	92	437	195	36	2.5
90/90-10	90	416	190	36	2.15
100/90-10	101	434	224	36	2.5

www.unilli.com

FOR

SCOOTER

STREET

UN-100A

SIZE	S.W.(mm)	O.D.(mm)	MAX. LOAD(KG)	MAX. PRESSURE(PSI)	RIM(inch)
90/80-12	90	449	190	36	2.15
90/90-12	90	467	212	36	2.15

UN-100N

SIZE	S.W.(mm)	O.D.(mm)	MAX. LOAD(KG)	MAX. PRESSURE(PSI)	RIM(inch)
3.50-10	92	437	195	36	2.5
90/90-10	90	416	190	36	2.15
100/90-10	101	434	224	36	2.5

P-2006

SIZE	S.W.(mm)	O.D.(mm)	MAX. LOAD(KG)	MAX. PRESSURE(PSI)	RIM(inch)
3.00-10	80	413	150	36	2.15
3.50-10	92	437	195	36	2.5
90/90-10	90	416	190	36	2.15
100/90-10	101	434	224	36	2.5

S-097

SIZE	S.W.(mm)	O.D.(mm)	MAX. LOAD(KG)	MAX. PRESSURE(PSI)	RIM(inch)
3.50-10	92	437	195	36	2.5
90/90-10	90	416	190	36	2.15
100/90-10	101	434	224	36	2.5

S-099

SIZE	S.W.(mm)	O.D.(mm)	MAX. LOAD(KG)	MAX. PRESSURE(PSI)	RIM(inch)
3.00-10 (80/90-10)	80	413	150	36	2.15
3.50-10	92	437	195	36	2.5
90/90-10	90	416	190	36	2.15
100/90-10	101	434	224	36	2.5

S-05

SIZE	S.W.(mm)	O.D.(mm)	MAX. LOAD(KG)	MAX. PRESSURE(PSI)	RIM(inch)
3.00-10	80	413	150	36	2.15
3.50-10	92	437	195	36	2.5
90/90-10	90	416	190	36	2.15
100/90-10	101	434	224	36	2.5

www.unilli.com

FOR

SCOOTER

STREET/DUAL SPORT

DT-170

SIZE	S.W.(mm)	O.D.(mm)	MAX. LOAD(KG)	MAX. PRESSURE(PSI)	RIM(inch)
3.00-10	80	413	150	36	2.15
3.50-10	92	437	195	36	2.5
90/90-10	90	416	190	36	2.15
100/90-10	101	434	224	36	2.5

A-2000

SIZE	S.W.(mm)	O.D.(mm)	MAX. LOAD(KG)	MAX. PRESSURE(PSI)	RIM(inch)
3.00-10	80	413	150	36	2.15
3.50-10	92	437	195	36	2.5
90/90-10	90	416	190	36	2.15
100/90-10	101	434	224	36	2.5

UN-7101

WHITE WALL

SIZE	S.W.(mm)	O.D.(mm)	MAX. LOAD(KG)	MAX. PRESSURE(PSI)	RIM(inch)
3.50-8	92	386	170	36	2.5
4.00-8	105	415	218	36	2.5
3.00-10	80	413	150	36	2.15
3.50-10	92	437	195	36	2.5

UN-168A

SIZE	S.W.(mm)	O.D.(mm)	MAX. LOAD(KG)	MAX. PRESSURE(PSI)	RIM(inch)
90/80-10	90	398	175	36	2.15

www.unilli.com

UN-9815

SIZE	S.W.(mm)	O.D.(mm)	MAX. LOAD(KG)	MAX. PRESSURE(PSI)	RIM(inch)
3.00-10	80	413	150	36	2.15
3.50-10	92	437	195	36	2.5

UN-173

SIZE	S.W.(mm)	O.D.(mm)	MAX. LOAD(KG)	MAX. PRESSURE(PSI)	RIM(inch)
110/90-12	112	513	280	36	2.5
120/80-14	120	552	236	32	2.75

UN-175

SIZE	S.W.(mm)	O.D.(mm)	MAX. LOAD(KG)	MAX. PRESSURE(PSI)	RIM(inch)
150/70-13	150	544	280	32	4.25

UN-512

DUAL SPORT

SIZE	S.W.(mm)	O.D.(mm)	MAX. LOAD(KG)	MAX. PRESSURE(PSI)	RIM(inch)
110/90-10	109	452	257	36	2.5
120/90-10	119	470	230	36	2.75
130/90-10	129	488	257	36	3.0

FOR

SCOOTER

DUAL SPORT/RADIAL

UN-7308

SIZE	S.W.(mm)	O.D.(mm)	MAX. LOAD(KG)	MAX. PRESSURE(PSI)	RIM(inch)
3.00-10	80	413	150	36	2.15

UN-516

SIZE	S.W.(mm)	O.D.(mm)	MAX. LOAD(KG)	MAX. PRESSURE(PSI)	RIM(inch)
3.50-10	92	437	195	36	2.5
110/80-10	109	430	236	36	2.5
120/70-12	122	473	195	32	3.5
120/80-12	119	497	290	36	2.75
130/70-12	129	487	224	32	3.5
130/60-13	129	486	206	32	3.5

UN-9813

SIZE	S.W.(mm)	O.D.(mm)	MAX. LOAD(KG)	MAX. PRESSURE(PSI)	RIM(inch)
120/70-10	122	422	180	32	3.5
120/70-12	122	473	195	32	3.5

UN-517

WINTER/SNOW TYRE

SIZE	S.W.(mm)	O.D.(mm)	MAX. LOAD(KG)	MAX. PRESSURE(PSI)	RIM(inch)
3.50-10	92	437	195	36	2.5
130/60-13	129	486	206	32	3.5

UN-805

WINTER/SNOW TYRE

SIZE	S.W.(mm)	O.D.(mm)	MAX. LOAD(KG)	MAX. PRESSURE(PSI)	RIM(inch)
130/70-8	129	385	150	40	3.5

UN-7862A

RST

RADIAL

SIZE	S.W.(mm)	O.D.(mm)	MAX. LOAD(KG)	MAX. PRESSURE(PSI)	RIM(inch)
90/90R10	90	420	190	36	2.15
3.50R10	94	552	195	36	2.5
100/90R10	100	440	224	36	2.5
110/70R12	110	462	175	32	3
120/70R12	121	475	195	32	3.5
130/70R12	130	490	224	32	3.5

UN-A8

RSP

SIZE	S.W.(mm)	O.D.(mm)	MAX. LOAD(KG)	MAX. PRESSURE(PSI)	RIM(inch)
90/90R10	90	420	190	36	2.15
3.50R10	94	552	195	36	2.5
100/90R10	100	440	224	36	2.5
110/70R12	110	462	175	32	3
120/70R12	121	475	195	32	3.5
130/70R12	130	490	224	32	3.5

RSR

SIZE	S.W.(mm)	O.D.(mm)	MAX. LOAD(KG)	MAX.	RIM(inch)
100/90R12	101	490	243	32	2.5
120/80R12	122	500	290	32	2.75

www.unilli.com

FOR MOTORCYCLE HIGH SPEED

AC-106

SIZE	S.W.(mm)	O.D.(mm)	MAX. LOAD(KG)	MAX. PRESSURE(PSI)	RIM(inch)
70/90-17	69	558	132	32	1.6
80/90-17	80	576	160	32	1.85

AC-169

SIZE	S.W.(mm)	O.D.(mm)	MAX. LOAD(KG)	MAX. PRESSURE(PSI)	RIM(inch)
70/90-14	69	482	118	32	1.6
80/90-14	80	500	140	32	1.85
90/90-14	90	518	170	32	2.15
90/80-17	90	576	170	32	2.15

AC-166

SIZE	S.W.(mm)	O.D.(mm)	MAX. LOAD(KG)	MAX. PRESSURE(PSI)	RIM(inch)
70/90-16	69	532	125	32	1.6
80/90-16	80	550	155	32	1.85
90/90-16	99	580	180	32	2.15
70/90-17	69	558	132	32	1.6
80/90-17	80	576	160	32	1.85

UN-558A

SIZE	S.W.(mm)	O.D.(mm)	MAX. LOAD(KG)	MAX. PRESSURE(PSI)	RIM(inch)
80/90-17	80	576	160	32	1.85

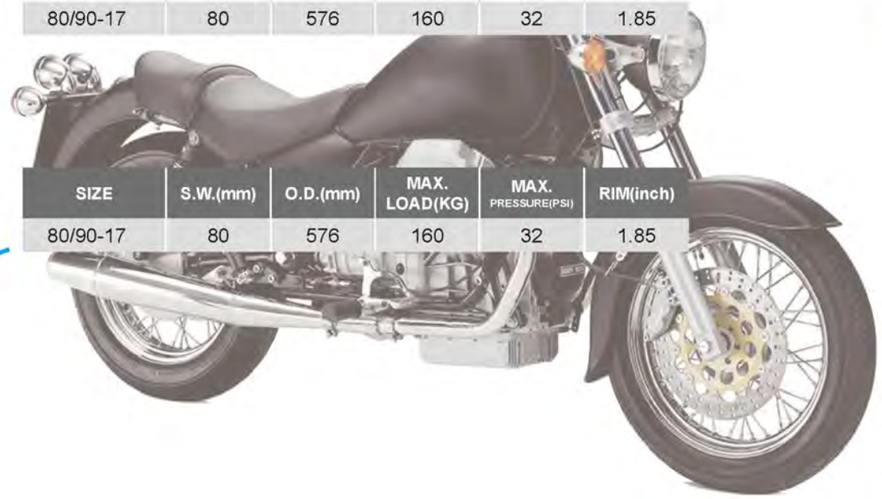

UN-9811

SIZE	S.W.(mm)	O.D.(mm)	MAX. LOAD(KG)	MAX. PRESSURE(PSI)	RIM(inch)
110/90-16	109	604	243	32	2.5

UN-9005

SIZE	S.W.(mm)	O.D.(mm)	MAX. LOAD(KG)	MAX. PRESSURE(PSI)	RIM(inch)
2.50-17	65	568	132	32	1.6
2.75-17	75	588	145	32	1.85

UN-9006

SIZE	S.W.(mm)	O.D.(mm)	MAX. LOAD(KG)	MAX. PRESSURE(PSI)	RIM(inch)
80/100-14	80	516	155	32	1.85
90/90-18	90	619	195	32	2.15
2.75-18	75	613	150	32	1.85
3.50-18	93	648	224	32	2.17

UN-90065

SIZE	S.W.(mm)	O.D.(mm)	MAX. LOAD(KG)	MAX. PRESSURE(PSI)	RIM(inch)
2.75-18	75	613	150	32	1.85
90/90-18	90	619	195	32	2.15
80/100-18	80	617	175	32	1.85

www.unilli.com

FOR MOTORCYCLE HIGH SPEED

UN-9007

SIZE	S.W.(mm)	O.D.(mm)	MAX. LOAD(KG)	MAX. PRESSURE(PSI)	RIM(inch)
100/80-17	101	592	200	32	2.5

UN-9008

SIZE	S.W.(mm)	O.D.(mm)	MAX. LOAD(KG)	MAX. PRESSURE(PSI)	RIM(inch)
100/90-18	101	637	224	32	2.5

UN-9817

SIZE	S.W.(mm)	O.D.(mm)	MAX. LOAD(KG)	MAX. PRESSURE(PSI)	RIM(inch)
130/90-15	129	615	265	32	3.0
140/90-15	143	633	335	32	3.5
120/80-16	119	598	250	32	2.75
130/90-16	129	640	307	32	3.0
60/80-17	60	528	97.5	32	1.4
70/80-17	69	544	121	32	1.6
80/80-17	80	560	145	32	1.85
110/70-17	110	586	212	32	3.0
120/80-17	119	624	257	32	2.75
130/70-17	129	614	265	32	3.5
140/60-17	139	600	272	32	3.75
140/70-17	139	628	300	32	3.75
70/80-18	69	569	125	32	1.6
80/80-18	80	585	150	32	1.85
80/90-18	80	601	165	32	1.85
90/80-18	90	601	175	32	2.15
90/90-18	90	619	195	32	2.15
100/80-18	101	617	206	32	2.5
100/90-18	101	637	224	32	2.5

www.unilli.com

UN-9817N

SIZE	S.W.(mm)	O.D.(mm)	MAX. LOAD(KG)	MAX. PRESSURE(PSI)	RIM(inch)
70/90-14	69	482	118	32	1.6
80/90-14	80	500	140	32	1.85
70/90-16	69	532	125	32	1.6
80/90-16	80	550	155	32	1.85
70/90-17	69	558	132	32	1.6
80/90-17	80	576	160	32	1.85
90/80-17	90	576	170	32	2.15
100/80-17	101	592	200	32	2.5

UN-9818

SIZE	S.W.(mm)	O.D.(mm)	MAX. LOAD(KG)	MAX. PRESSURE(PSI)	RIM(inch)
70/90-17	69	558	132	32	1.6
80/90-17	80	576	160	32	1.85

UN-9819

SIZE	S.W.(mm)	O.D.(mm)	MAX. LOAD(KG)	MAX. PRESSURE(PSI)	RIM(inch)
3.00-16	80	576	155	32	1.85

FOR MOTORCYCLE
HIGH SPEED|STREET

UN-9820

SIZE	S.W.(mm)	O.D.(mm)	MAX. LOAD(KG)	MAX. PRESSURE(PSI)	RIM(inch)
2.75-16	75	562	140	32	1.85

DT-188

SIZE	S.W.(mm)	O.D.(mm)	MAX. LOAD(KG)	MAX. PRESSURE(PSI)	RIM(inch)
70/90-17	69	558	132	32	1.6
80/90-17	80	576	160	32	1.85

UN-7102

STREET

SIZE	S.W.(mm)	O.D.(mm)	MAX. LOAD(KG)	MAX. PRESSURE(PSI)	RIM(inch)
3.00-16	80	576	155	32	1.85
2.50-17	65	568	132	32	1.6
3.00-17	80	602	165	32	1.85
2.75-18	75	613	150	32	1.85

UN-7103

SIZE	S.W.(mm)	O.D.(mm)	MAX. LOAD(KG)	MAX. PRESSURE(PSI)	RIM(inch)
2.75-17	75	588	145	32	1.85
3.00-17	80	602	165	32	1.85
3.00-18	80	627	175	32	1.85

UN-7103

WHITE WALL

SIZE	S.W.(mm)	O.D.(mm)	MAX. LOAD(KG)	MAX. PRESSURE(PSI)	RIM(inch)
5.00-15	129	641	325	32	3.0
5.00-16	129	666	345	32	3.0
4.00-18	104	671	280	32	2.15
4.50-18	111	691	335	32	2.15
4.00-19	104	697	290	32	2.15

UN-7116

WHITE WALL

SIZE	S.W.(mm)	O.D.(mm)	MAX. LOAD(KG)	MAX. PRESSURE(PSI)	RIM(inch)
5.00-15	129	641	325	32	3.0

UN-7105

SIZE	S.W.(mm)	O.D.(mm)	MAX. LOAD(KG)	MAX. PRESSURE(PSI)	RIM(inch)
3.50-16	93	598	200	32	2.15
3.00-17	80	602	165	32	1.85
90/90-18	90	619	195	32	2.15
3.25-18	88	639	200	32	2.15
2.75-18	75	613	150	32	1.85

UN-7106

SIZE	S.W.(mm)	O.D.(mm)	MAX. LOAD(KG)	MAX. PRESSURE(PSI)	RIM(inch)
2.25-17	61	556	115	32	1.6
2.50-17	65	568	132	32	1.6
3.60H-18	93	648	230	32	2.15
3.25-19	88	665	212	32	2.15
3.50-19	93	675	230	32	2.15

www.unilli.com

FOR MOTORCYCLE STREET

UN-7107

SIZE	S.W.(mm)	O.D.(mm)	MAX. LOAD(KG)	MAX. PRESSURE(PSI)	RIM(inch)
3.25-18	88	639	200	32	2.15
3.50-18	93	648	224	32	2.15
3.25-19	88	665	212	32	2.15
3.50-19	93	675	230	32	2.15

UN-9010W

SIZE	S.W.(mm)	O.D.(mm)	MAX. LOAD(KG)	MAX. PRESSURE(PSI)	RIM(inch)
2.75-18	75	613	150	32	1.85
80/100-18	80	617	175	32	1.85
90/90-18	90	619	195	32	2.15

UN-9810

SIZE	S.W.(mm)	O.D.(mm)	MAX. LOAD(KG)	MAX. PRESSURE(PSI)	RIM(inch)
90/90-18 (3.00-18)	90	619	195	32	2.15
100/90-18 (3.25-18)	101	637	224	32	2.5

UN-7108

SIZE	S.W.(mm)	O.D.(mm)	MAX. LOAD(KG)	MAX. PRESSURE(PSI)	RIM(inch)
2.50-17	65	568	132	32	1.6
2.50-18	65	593	140	32	1.6

UN-7108A

SIZE	S.W.(mm)	O.D.(mm)	MAX. LOAD(KG)	MAX. PRESSURE(PSI)	RIM(inch)
3.00-16	80	576	155	32	1.85

UN-7108B

SIZE	S.W.(mm)	O.D.(mm)	MAX. LOAD(KG)	MAX. PRESSURE(PSI)	RIM(inch)
2.25-17	61	556	115	32	1.6

UN-7109

SIZE	S.W.(mm)	O.D.(mm)	MAX. LOAD(KG)	MAX. PRESSURE(PSI)	RIM(inch)
3.00-17	80	602	165	32	1.85
2.75-18	75	613	150	32	1.85
3.00-18	80	627	175	32	1.85

UN-7110

SIZE	S.W.(mm)	O.D.(mm)	MAX. LOAD(KG)	MAX. PRESSURE(PSI)	RIM(inch)
100/90-18	101	637	224	32	2.5
90/90-19	90	645	200	32	2.15
100/90-19	101	663	230	32	2.5

www.unilli.com

FOR MOTORCYCLE
STREET|DUAL SPORT

UN-7111

SIZE	S.W.(mm)	O.D.(mm)	MAX. LOAD(KG)	MAX. PRESSURE(PSI)	RIM(inch)
2.75-16	83	574	140	32	1.85
2.50-17	72	582	132	32	1.6
2.75-17	83	600	145	32	1.85
3.00-17	88	616	165	32	1.85
2.75-18	83	625	150	32	1.85
3.00-18	88	641	175	32	1.85

UN-7112

SIZE	S.W.(mm)	O.D.(mm)	MAX. LOAD(KG)	MAX PRESSURE(PSI)	RIM(inch)
3.00-17	80	602	165	32	1.85

UN-173

SIZE	S.W.(mm)	O.D.(mm)	MAX. LOAD(KG)	MAX. PRESSURE(PSI)	RIM(inch)
120/70-15	114	547	224	32	3.5
90/90-17	93	596	185	32	2.15
100/90-17	105	611	218	32	2.5

UN-175

SIZE	S.W.(mm)	O.D.(mm)	MAX. LOAD(KG)	MAX. PRESSURE(PSI)	RIM(inch)
130/80-15	130	594	272	32	3.0
110/80-17	110	612	230	32	2.5

UN-7860

SIZE	S.W.(mm)	O.D.(mm)	MAX. LOAD(KG)	MAX. PRESSURE(PSI)	RIM(inch)
80/100-17	81	595	170	32	1.85
90/90-17	93	596	185	32	2.15
2.75-18	70	615	150	32	1.85

UN-7862

SIZE	S.W.(mm)	O.D.(mm)	MAX. LOAD(KG)	MAX. PRESSURE(PSI)	RIM(inch)
100/90-17	105	611	218	32	2.5
110/80-17	110	612	230	32	2.5
120/80-17	122	624	257	32	2.75
100/90-18	102	640	224	32	2.5

UN-7301

DUAL SPORT

SIZE	S.W.(mm)	O.D.(mm)	MAX. LOAD(KG)	MAX. PRESSURE(PSI)	RIM(inch)
90/90-18	90	619	195	32	2.15
110/90-18	109	655	257	32	2.5
2.75-21	75	689	165	32	1.85

www.unilli.com

FOR MOTORCYCLE DUAL SPORT

UN-7305

SIZE	S.W.(mm)	O.D.(mm)	MAX. LOAD(KG)	MAX. PRESSURE(PSI)	RIM(inch)
100/100-18	101	657	243	32	2.5
3.50-18	101	657	243	32	2.5

UN-7306

SIZE	S.W.(mm)	O.D.(mm)	MAX. LOAD(KG)	MAX. PRESSURE(PSI)	RIM(inch)
3.00-17	80	602	165	32	1.85
3.50-18	93	648	224	32	2.15
2.75-18	75	613	150	32	1.85
3.00-18	80	627	175	32	1.85
4.10-18	104	671	280	32	2.15
3.00-19	80	653	185	32	1.85
2.75-21	75	689	165	32	1.85

UN-7309

SIZE	S.W.(mm)	O.D.(mm)	MAX. LOAD(KG)	MAX. PRESSURE(PSI)	RIM(inch)
90/90-18	90	619	195	32	2.15

UN-7311

SIZE	S.W.(mm)	O.D.(mm)	MAX. LOAD(KG)	MAX. PRESSURE(PSI)	RIM(inch)
110/90-17	109	630	250	32	2.5
90/90-18	90	619	195	32	2.15
2.75-18	75	613	150	32	1.85

UN-7312

SIZE	S.W.(mm)	O.D.(mm)	MAX. LOAD(KG)	MAX. PRESSURE(PSI)	RIM(inch)
80/100-14	80	516	155	32	1.85
110/90-16	109	604	243	32	2.5
90/90-17	90	594	185	32	2.15
110/90-17	109	630	250	32	2.5
120/80-17	119	624	257	32	2.75
120/90-17	119	648	280	32	2.75
2.50-17	72	582	132	32	1.6
2.75-17	83	600	145	32	1.85
2.75-18	75	613	150	32	1.85
3.50-18	93	648	224	32	2.15
90/90-18	90	619	195	32	2.15
120/80-18	119	649	265	32	2.75
90/90-19	90	645	200	32	2.15
90/90-21	90	695	212	32	2.15

UN-9009

SIZE	S.W.(mm)	O.D.(mm)	MAX. LOAD(KG)	MAX. PRESSURE(PSI)	RIM(inch)
110/90-17	109	630	250	32	2.5
90/90-18	90	619	195	32	2.15
90/90-19	90	645	200	32	2.15

UN-7315

WINTER/SNOW TYRE

SIZE	S.W.(mm)	O.D.(mm)	MAX. LOAD(KG)	MAX. PRESSURE(PSI)	RIM(inch)
2.75-18	75	613	150	32	1.85
90/90-18	90	619	195	32	2.15

www.unilli.com

FOR MOTOCROSS

UN-7307F

SIZE	S.W.(mm)	O.D.(mm)	MAX. LOAD(KG)	MAX. PRESSURE(PSI)	RIM(inch)
80/100-21	80	693	195	32	1.85

UN-7307

SIZE	S.W.(mm)	O.D.(mm)	MAX. LOAD(KG)	MAX. PRESSURE(PSI)	RIM(inch)
110/100-18	109	474	280	32	2.5
100/90-19	109	666	230	32	2.5
110/90-19	109	681	265	32	2.5
120/90-19	120	705	300	32	2.75

UN-7302

SIZE	S.W.(mm)	O.D.(mm)	MAX. LOAD(KG)	MAX. PRESSURE(PSI)	RIM(inch)
2.75-10	71	399	128	36	1.75

UN-7303

SIZE	S.W.(mm)	O.D.(mm)	MAX. LOAD(KG)	MAX. PRESSURE(PSI)	RIM(inch)
2.75-10	71	399	128	36	1.75
2.50-12	65	441	125	36	1.5
2.75-12	71	450	140	36	1.75
3.00-12	80	464	132	36	2.1
80/100-12	80	465	190	36	1.85

UN-7310

SIZE	S.W.(mm)	O.D.(mm)	MAX. LOAD(KG)	MAX. PRESSURE(PSI)	RIM(inch)
2.50-10	65	390	115	36	1.5

UN-7314

SIZE	S.W.(mm)	O.D.(mm)	MAX. LOAD(KG)	MAX. PRESSURE(PSI)	RIM(inch)
60/100-14	60	476	103	32	1.4

UN-7316

SIZE	S.W.(mm)	O.D.(mm)	MAX. LOAD(KG)	MAX. PRESSURE(PSI)	RIM(inch)
90/100-14	92	540	185	32	2.15
90/100-16	90	586	195	32	2.15
70/100-17	70	576	140	32	1.6
70/100-19	70	626	150	32	1.6

UN-7317

SIZE	S.W.(mm)	O.D.(mm)	MAX. LOAD(KG)	MAX. PRESSURE(PSI)	RIM(inch)
120/90-18	119	673	290	32	2.75

www.unilli.com

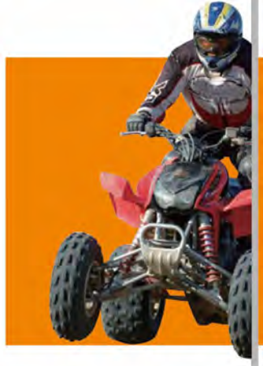

FOR ATV&UTV

UN-702

SIZE	S.W.(mm)	O.D.(mm)	RIM. WIDTH(inch)	Max. Infl. Pressure(PSI)
145/70-6	136	350	4.5	4

UN-704

SIZE	S.W.(mm)	O.D.(mm)	RIM. WIDTH(inch)	Max. Infl. Pressure(PSI)
145/70-6	136	350	4.5	4

UN-711

SIZE	S.W.(mm)	O.D.(mm)	RIM. WIDTH(inch)	Max. Infl. Pressure(PSI)
19x7.00-8	181	477	5.0	5
18x9.50-8	247	447	8.0	5

UN-712

SIZE	S.W.(mm)	O.D.(mm)	RIM. WIDTH(inch)	Max. Infl. Pressure(PSI)
18x9.50-8	268	456	8.0	5

UN-713

SIZE	S.W.(mm)	O.D.(mm)	RIM. WIDTH(inch)	Max. load (lbs)	Max. Infl. Pressure(PSI)
25x8-12	216	629	7.0	340	7
25x10-12	252	628	7.5	340	7

UN-715

SIZE	S.W.(mm)	O.D.(mm)	RIM. WIDTH(inch)	Max. Infl. Pressure(PSI)
22x10-9	290	526	8.0	5

UN-716

SIZE	S.W.(mm)	O.D.(mm)	RIM. WIDTH(inch)	Max. Infl. Pressure(PSI)
20x10R9	260	556	8.0	36

UN-717

SIZE	S.W.(mm)	O.D.(mm)	RIM. WIDTH(inch)	Max. Infl. Pressure(PSI)
120/60-8	116	338	4.0	32

www.unilli.com

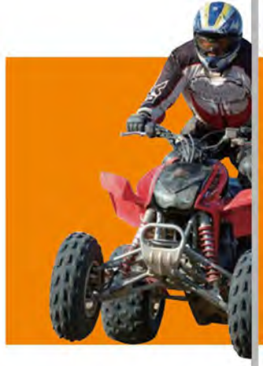

FOR ATV&UTV

UN-718

SIZE	S.W.(mm)	O.D.(mm)	RIM. WIDTH(inch)	Max. Infl. Pressure(PSI)
160/40-10	148	390	4.0	32

UN-719R

SIZE	S.W.(mm)	O.D.(mm)	RIM. WIDTH(inch)	Max. Infl. Pressure(PSI)
16x8.00-7	180	378	5.2	5

UN-722

SIZE	S.W.(mm)	O.D.(mm)	RIM. WIDTH(inch)	Max. Infl. Pressure(PSI)
19x7.00-8	181	476	5.5	5
21x7.00-10	177	533	5.5	5

UN-723

SIZE	S.W.(mm)	O.D.(mm)	RIM. WIDTH(inch)	Max. Infl. Pressure(PSI)
26x9R12	227	559	7.0	7
26x12R12	304	559	9.5	7
26x9R14	231	660	7.0	7
26x11R14	280	660	8.0	7

UN-724

SIZE	S.W.(mm)	O.D.(mm)	RIM. WIDTH(inch)	Max. Infl. Pressure(PSI)
22x7.00-10	177	559	5.5	5

UN-726

SIZE	S.W.(mm)	O.D.(mm)	RIM. WIDTH(inch)	Max. Infl. Pressure(PSI)
22x10.00-10	248	559	8.0	5

UN-727

SIZE	S.W.(mm)	O.D.(mm)	RIM. WIDTH(inch)	Max. Infl. Pressure(PSI)
21x10.00-8	280	532	8.0	5

UN-728

SIZE	S.W.(mm)	O.D.(mm)	RIM. WIDTH(inch)	Max. Infl. Pressure(PSI)
24x8.00-12	199	608	6.5	7
24x10.00-12	244	620	8.0	7

www.unilli.com